COMPACT 8N
COMPACT 10N DUAL

SMART RUGGED DESIGN

- Impact-proof counterweight with integrated ladder protection, AC motors and charger plug
- Reinforced guardrails with additional vertical stiles for maximum durability

MAXIMIZED POTENTIAL

- Access all worksites: foldable guardrails, lateral & longitudinal forklift pockets
- IN/OUT usage with no platform weight capacity restriction

UNIQUE USER EXPERIENCE

- Proportional movements for precise driving (AC motors)
- Ergonomic upper control box with grab handle & speed selector

UNBEATABLE SERVICEABILITY

- Haulotte Activ'Energy Management for battery care
- On-board & remote settings and diagnostic tools with Haulotte Diag, Haulotte Activ'Screen and Sherpal telematics solution

Haulotte EQUIPMENT

COMPACT 8N
COMPACT 10N DUAL

ELECTRIC SCISSOR LIFTS

TECHNICAL DATA

	COMPACT 8N	COMPACT 10N DUAL
Working height - indoor	8 m	9.8 m
Working height - outdoor	8 m	7.2 m
Platform height - indoor	6 m	7.8 m
Platform height - outdoor	6 m	5.2 m
Max. drive working height - indoor	8 m	7.8 m
Max. drive working height - outdoor	8 m	5.2 m
Lift capacity - inside	350 kg (2 pers.)	250 kg (2 pers.)
Lift capacity - outside	350 kg (1 pers.)	250 kg (1 pers.)
Lift capacity on the extension	120 kg	
A Platform length	2.4 m	
B Platform length - extended	3.32 m	
Length - extension	0.92 m	
C Platform width - outside	0.8 m	
D Height - stowed	2.23 m	2.35 m
Height - guardrails lowered	1.82 m	1.94 m
E Overall width	0.81 m	
F Length	2.5 m	
G Wheelbase	1.86 m	
H Ground clearance - center	12.5 cm	
Ground clearance - deployed potholes	2 cm	
Drive speed	0.7 / 1.5 / 4.2 km/h	
Gradeability	25 %	
Tilt (longitudinal / lateral)	3.5° / 1.5°	
Turning radius - outside	2.05 m	
Non-marking tyres	15 x 5	
Batteries	24 V - 225 Ah (C20)	
Hydraulic system capacity	10 l	
Weight	2 120 kg	2 160 kg

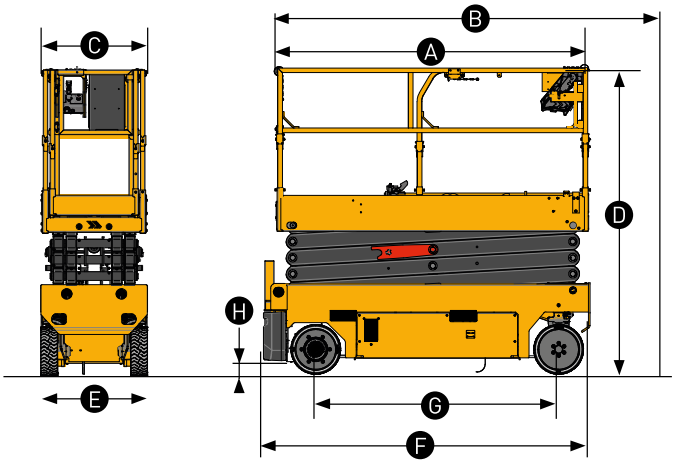

STANDARD EQUIPEMENT

> Haulotte Activ'Screen: on-board diagnostic and setting screen
> Haulotte Activ'Energy Management: Smart CAN charger with manual battery water filling system
> Versatile use: outdoor/ indoor
> Foldable guardrails
> Front platform extension
> Drop bar
> AC motors
> 27A multivoltage charger
> Mobile pothole guards
> Battery access with swing out tray
> Lateral & longitudinal forklift pockets
> Motion alarm
> Single flashing light
> 2 front steering wheels, 2 rear drive wheels
> Solid non marking tires

OPTIONS & ACCESSORIES

> Haulotte Activ'Energy Management: automatic battery water filling systems
> Secondary guarding system
> Telematics solutions
> AGM maintenance-free batteries
> Pipe cradle
> Extra Step (Compact 8N/ 10N only)
> Panel carrier
> Additional protection of upper & lower control box
> Working light
> Flashing light (dual or 360°)
> Biodegradable hydraulic oil
> Cold weather hydraulic oil

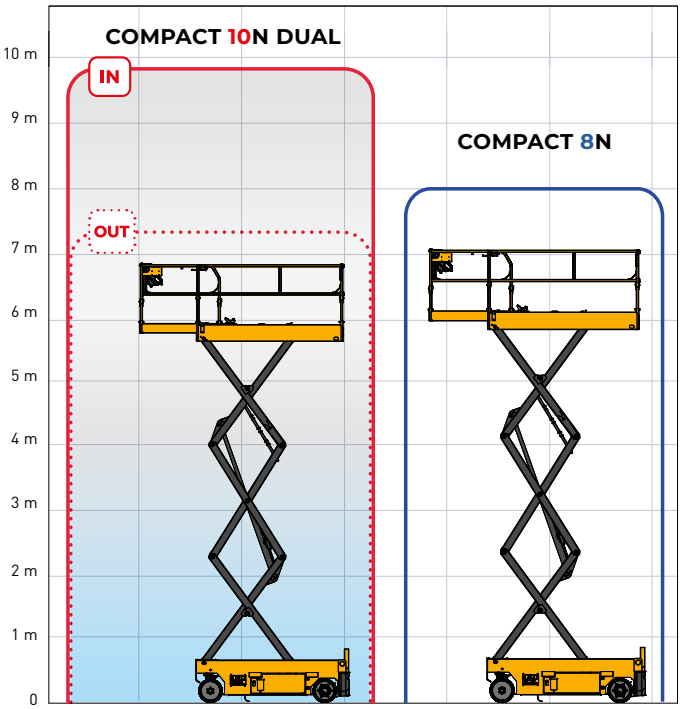

4001225390 - Non contractual document - We reserve the right to modify the technical characteristics of this document without notice - 05/2026

Rue Emile Zola - 42420 Lorette - France · Tel: +33 (0)4 77 29 24 24 · Fax: +33 (0)4 77 29 43 95 ·
haulotte@haulotte.com · **www.haulotte.com**

Haulotte
LET'S DARE TOGETHER